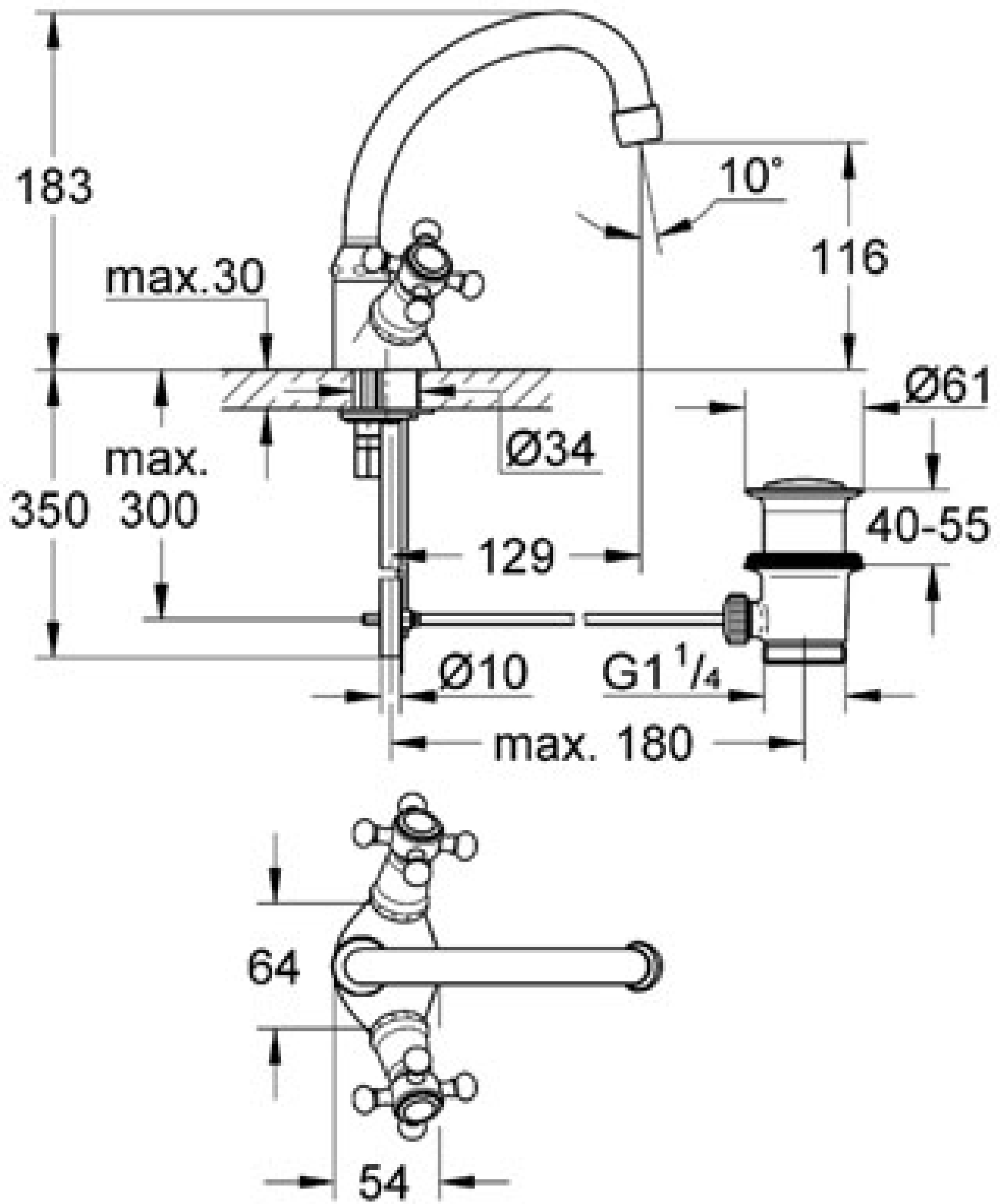
183
10°
116
max.30
Ø61
Ø34
max.
350
300
40-55
129
Ø10
G1 1/4
max. 180
64
54